Amica

FZ206.3
FZ136.3
FZ210.3

Sticker with serial number of appliance

EN OPERATING MANUAL

Table of contents

GUIDELINES CONCERNING THE SAFETY OF USE.....7

INSTALLATION AND OPERATING CONDITIONS OF THE APPLIANCE....7

OPERATION AND FUNCTIONS 9

USING THE REFRIGERATOR EFFICIENTLY.....11

DEFROSTING, WASHING AND MAINTENANCE.....12

TROUBLE-SHOOTING.....13

ENVIRONMENTAL PROTECTION.....14

CLIMATE RANGE.....15

EN ***Dear Customer,***

This Amica freezer is a combination of exceptional user-friendliness and excellent efficiency. Prior to dispatch, each unit was carefully checked for its safety and operating capabilities.

Before starting the appliance, please read this operating manual carefully.

Note!

This freezer is intended for use at home only.

The manufacturer reserves the right to introduce modifications, which do not affect the operation of the appliance. The changes in the equipment, as well as the inside and outside decoration, which do not affect its functionality and safety are permissible.

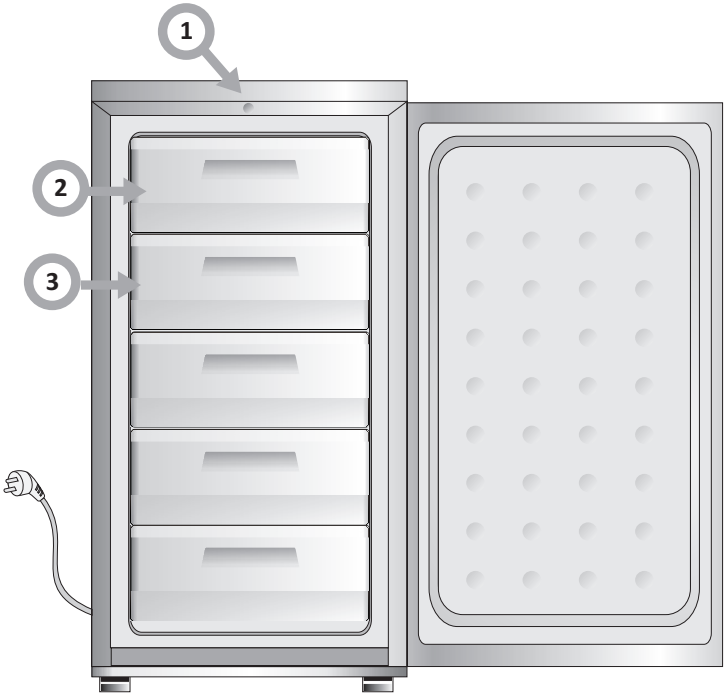

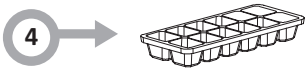

1

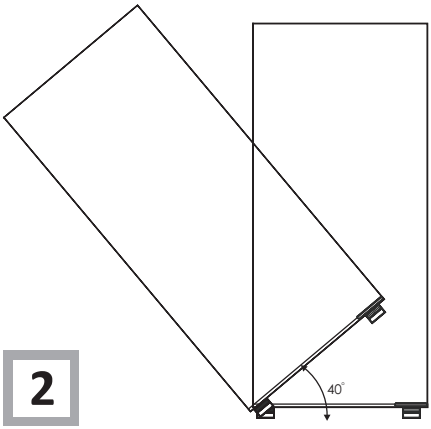
40°

2

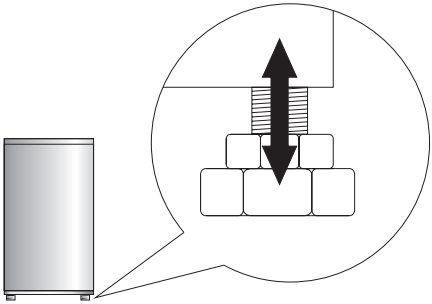

3

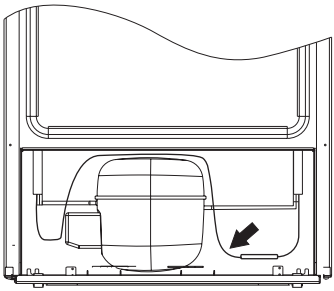

5

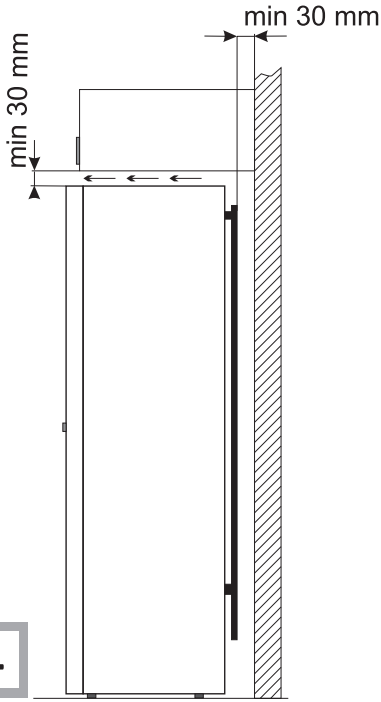
min 30 mm
min 30 mm

4

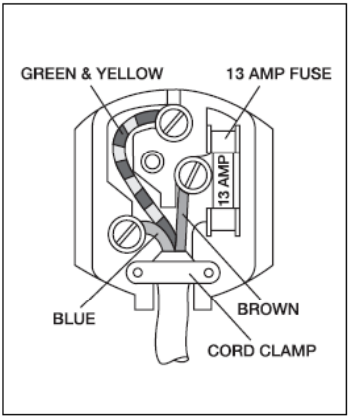
GREEN & YELLOW
13 AMP FUSE
13 AMP
BLUE
BROWN
CORD CLAMP

6

8

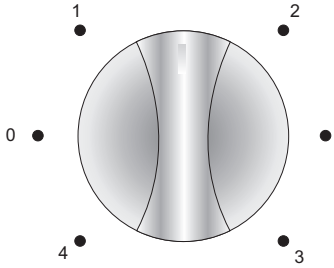

11

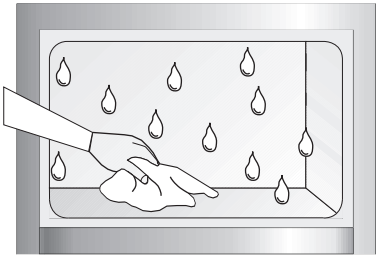

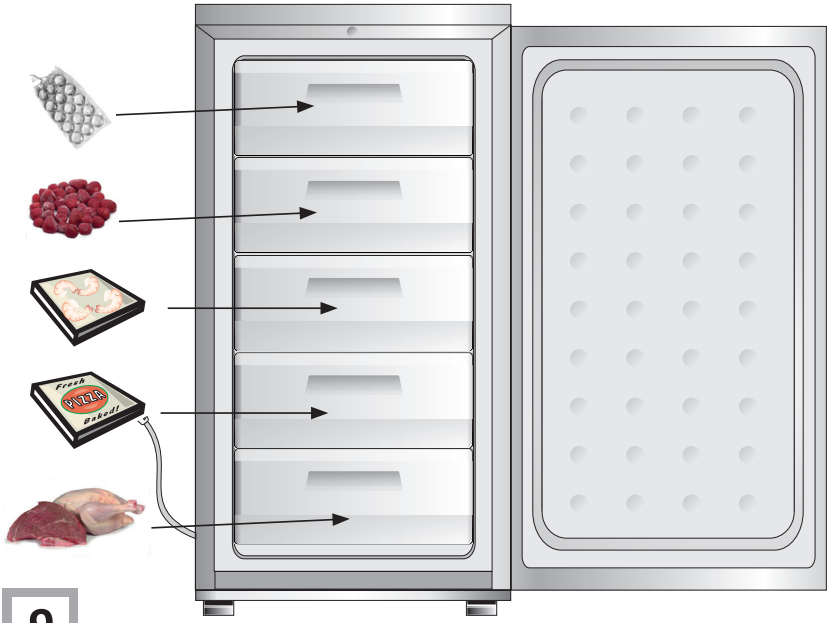

9

16

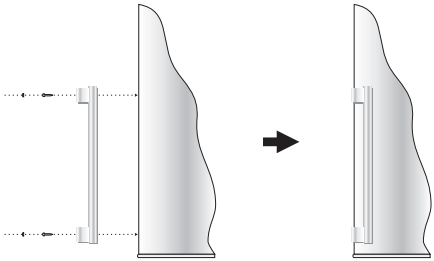

17

GUIDELINES CONCERNING THE SAFETY OF USE

- **The Manufacturer shall not be held liable for damage arising from the failure to observe the instructions contained in this manual.**
- **Keep this manual for future re- ference, or to pass it over to the next user.**
- This appliance is not intended for use by persons (including children) with limited physical or mental capabilities and persons who lack experience or familiarity with the appliance..
- **D o not allow una tte nde d children to use the appliance. Do not allow them to play with the appliance. They must not climb inside the drawers and swing on the doors.**
- The appliance operates properly at the ST ambient temperature (see table with technical specification). Do not use it in the cellar, unheated summer cottage during autumn and winter.
- When placing, moving, lifting the appliance, do not hold the door han- dles, do not pull the condenser at the rear part of the refrigerator and do not touch the compressor unit.
- **When transporting, moving or positioning the fridge-freezer do not tilt it by more than 40° from the vertical position. Should such a situation occur, the appliance should be switched on after minimum 2 hours from its re-placement in the right position (fig. 2).**
- Pull the plug out from the mains socket before each maintenance activity. Do not pull on the cord, but hold the body of the plug instead.
- The “cracking” sound, which the appliance may emit is caused by the expansion and contraction of parts as a result of temperature variations.
- For safety reasons do not repair the appliance yourself. Repairs car- ried out by persons who do not have the required qualifications may result in serious danger for the user of the appliance.
- Air the room in which the appliance is placed for a few minutes (the size of the room for a product containing isobutha- ne/R600a must be at least 4m^3) to avoid damage to the cooling system.
- Do not refreeze partly thawed products.
- Do not store beverages in bottles and cans, especially carbonated be- verages, in the freezer chamber. The cans and the bottles may explode.
- **Do not put frozen products, taken out directly from the freezer (lollies, ice cubes, etc.) into your mouth, their low temperature may cause severe frost-bite.**
- Make sure you do not damage the cooling system, by puncturing the refrigerant pipes in the evaporator or breaking the pipes. The refrige- rant is flammable. If the refrigerant makes contact with the eyes, rinse them with clean water and call for medical assistance immediately.

Anti-bacteria System (fig. 17)

The Antibacteria System protects foods and products inside the- refrigerator from bacteria and mould which may cause unpleasant smells and shorten storage time. The Antibacteria System prolongs the freshness of food. The special material used to construct the fridge liner prevents bacterial, microorganism and mould growth.

INSTALLATION AND OPERATING CONDITIONS OF THE APPLIANCE

Installation before using the appliance for the first time

- Take the product out of the package, re- move the scotch tape protecting the door and the equipment. Any remaining adhesive stains may be removed with a mild washing agent.
- Do not throw away the polystyrene elements of the packaging. If it is necessary to transport the fridge-freezer, pack it in the polystyrene elements and film as well as protect ing it with scotch tape
- Clean the interior surface of the fridge- freezer and the elements of the equipment with a washing agent dissolved in lukewarm water, then wipe it dry.
- Place the fridge-freezer on an even, flat and stable surface, in dry, aired and shaded room, far from the heat sources such as: oven, hob, central heating radiators, central heating pipes, hot water installation, etc.

- **On the exterior surface of the product may be a protective foil, this foils should be removed.**
- Make sure the appliance is placed in a horizontal position by screwing in the 2 adju- stable front legs (fig. 3)
- **In order to ensure easy opening of the door, the distance between the side wall of the appliance (from the side of the door hinges), and the wall should amount to: 70 mm. (for appliances with external handle) and 50 mm (for appliances with recessed handle).**
- **Ensure adequate ventilation of the room and free air circulation from all sides of the appliance (fig. 4).**

Minimum distances from the heat sources
- from the electric gas and other ovens - 30 mm,
- from oil or coal fired ovens - 300 mm,
- from built-in ovens - 50 mm

If there is no possibility of ensuring the above- mentioned distances, provide an appropriate insulation board.

The rear wall of the refrigerator, in particular, the condenser and other elements of the cooling system must not contact other elements, which may damage them, (e.g. central heating pipes and the water supply pipes).

It is forbidden to readjust or modify any parts of the unit. It is crucial not to damage the capillary tube visible in the compressor recess. The tube may not be bent, straightened or wound.
If the capillary tube is damaged by the user the guarantee will be void (fig. 5).

Mains connection

- **Before the appliance is connected to the mains, set the adjustment knob to the "OFF" / “0” position.**
- The appliance is intended for connection to alternating current. The connection values for voltage (V) and frequency (Hz) are given on the nameplate in the cabinet.Power must be connected via a wall socket with switch. The wall socket should be easily accessible.All earthing requirements stipulated by the local electricity authority must be observed. The cabinet plug and wall socket should then give correct earthing. If in doubt, contact your local supplier or an authorised electrician.

This appliance must be earthed
The flexible cord (mains lead) fitted to this appliance has three cores for use with a 3-pin 13-amp plug. If a BS 1363 (13-amp) fused plug is used, it should be fitted with a 13-amp fuse.

- If an extension lead is used (with a protec- tion ring and safety certificate), its socket must be located at a safe distance, away from the sinks, and must not be in a place where it could be flooded by water or waste water.

- The data is provided on the rated plate located at the bottom of the wall inside the chamber.

Important
The cores in this mains lead are coloured in accordance with the following code:

GREEN-AND-YELLOW: EARTH
BLUE: NEUTRAL
BROWN: LIVE

These colours might not correspond with the colour markings identifying the terminals in your plug (fig. 6)

In some models the handle is put into the appliance, You should screw it with Your own screwdriver (Fig. 16).

OPERATION AND FUNCTIONS

Control panel (Fig. 8).

1. Bulb cover
2. Temperature adjustment knob

Temperature adjustment

Turning the knob to a different setting changes the temperature in the fridge-freezer.

Available knob settings:

• appliance switched off	- 0 setting
• maximum temperature	- 1 setting
• optimal temperature	- 2-3 setting
• minimum temperature	- 4 setting

Do not put food into the fridge freezer before it has reached its operating temperature, which takes minimum 4 hours.

Temperature inside the fridge / freezer chamber

Do not change the temperature settings due to the change in the season of the year. The ambient temperature increase will be detected by the sensor and the compressor will be switched on automatically for a longer period of time in order to maintain the temperature set inside the chambers.

Minor changes in temperature

The slight changes in temperature are perfectly normal and may occur, for instance during the storage of great quantities of fresh products in the fridge, or when the door is open for a longer period of time. This will not affect the condition of the stored foodstuff, and the temperature will quickly return to its set value.

Storage of food in the fridge-freezer

Observe the following recommen- dations to ensure the food remains fresh.

Freezing food

- Practically all the food products, except for vegetables consumed raw, such as lettuce can be frozen.
- Only food products of the highest quality, divided into small portions for single use, should be frozen.
- Products should be packed in materials that are odourless, resistant to air and moisture penetration, and not susceptible to fat. Plastic bags, polyethylene and aluminium sheets are the best wrapping materials.
- The packaging should be tight and should stick to the frozen products. Do not use glass containers.
- Keep fresh and warm foodstuff at am- bient temperature away from the products, which have already been frozen.
- We advise you not to place more of fresh food at a time to the freezer per day (see table witch technical specification).
- In order to maintain optimum quality of the frozen food, reorganise the food that is in the middle of the freezer, so that it does not touch the products that are not yet frozen.
- It is recommended that you move the already frozen products to one side and place the fresh products that are to be frozen on the opposite side, as close to the rear and side walls as possible.
- To freezing products, use space marked (*/***).
- **Bear in mind that the temperature in the freezer is affected by several factors, including the ambient temperature and the quantity of food products in the chamber, the frequency of opening the door, the amount of frost in the freezer, and the thermostat setting.**
- **If you cannot open the freezer door immediately after closing it, allow 1-2 minutes for the negative pressure to com- pensate, and try again to open the door.**

The storage time for frozen products depends on their quality before freezing when fresh, and on the storage temperature. The following storage periods are recommended when the temperature of -18°C or lower is maintained:

Products	Months
Beef	6-8
Veal	3-6
Giblets	1-2
Pork	3-6
Poultry	6-8
Eggs	3-6
Fish	3-6
Vegetables	10-12
Fruit	10-12

USING THE REFRIGERATOR EFFICIENTLY

Practical everyday tips

- Do not place fridges or freezers next to radiators, heaters, stoves or in direct sunlight.
- Make sure that air vents are not covered up and clean the dust off them once or twice a year.
- Select the right temperature: **6 to 8°C in your refrigerator** and -18°C in your freezer is sufficient.
- When on holiday, turn up the temperature in your fridge.
- Only open your fridge or freezer when necessary. It helps if you know what food each contains and where it is located. Return food to the fridge or freezer as soon as possible after you have used it so that it does not warm up too much.
- Wipe the inside of your fridge regularly with a cloth soaked in a mild detergent. Appliances which are not self-defrosting will require regular defrosting. Do not allow frost layers thicker than 10 mm to form.
- Keep the seal around the door clean, otherwise it will not shut properly. Always replace broken seals.

Understanding the stars

* Temperature is at least **-6°C**; sufficient to store frozen food for about a week. Drawers or compartments marked with one star used to be a feature of (mostly) cheaper fridges.

** Food can be stored at -12°C or below for 1-2 weeks without losing its taste. Not suitable for freezing food.

*** This rating is mainly used to store foods at -18°C or below. Can also be used to freeze up to 1 kilogram of fresh food.

**** This appliance is suitable for storing foods at **-18°C** or below and freezing larger quantities of fresh foods.

Storage zones in the refrigerator

- Due to the natural circulation of the air in the appliance, there are different temperature zones in the refrigerator chamber.
- The coldest area is directly above the vegetables drawers. Use this area for all delicate and highly perishable food e.g.

  - Fish, meat, poultry
  - Sausage products, ready meals
  - Dishes or baked goods containing eggs or cream
  - Fresh dough, cake mixtures
  - Pre-packed vegetable and other fresh food with a label stating it should be kept at a temperature of approx 4°C.
- The warmest area is in the top section of the door. Use this for storing butter and cheese.

Food that should not be stored in a refrigerator

- Not all food is suitable for storing in the refrigerator, particularly:

  - Fruit and vegetables which are sensitive to cold, such as bananas, avocado, papaya, passion fruit, aubergines, peppers, tomatoes and cucumbers.
  - Fruit which is not yet ripe
  - Potatoes

Example of storing the food - see figure 9.

DEFROSTING, WASHING AND MAINTENANCE

Defrosting the freezer

- It is recommended to combine defrosting the appliance with washing it.
- Excessive accumulation of ice on the freezing areas impairs the appliance's freezing capacity and increases the energy consumption.
- Defrost the appliance at least once or twice a year.
- If there is food in the freezer, set the knob to the max. position about 4 hours before the planned defrosting. This will ensure the possibility of storing the food at the ambient temperature for a longer time.
- After taking the food out of the freezer, put it in a container, wrap it with several layers of paper, a blanket and store it at a cool place.
- The defrosting operation should last as short as possible. Long storage of food at the ambient temperature shortens their shelf life.

Disconnect the appliance from the mains before cleaning by removing the plug from the mains socket or switching off the fuse. Prevent water from penetrating the control panel or the light.

You must not put an electric heater, a heating fan or a hair dryer into the freezer by any means.

In order to defrost the freezer chamber, you must take the following steps:

- Set the knob at "OFF" / "0" position, take out the plug from the mains socket.
- Open the door and remove the food from the freezer.
- After about 0.5h, it is possible to remove the white frost or water from the smooth wall surfaces (fig. 11).
- Wash the interior of the freezer and wipe it dry.
- Switch on the appliance as per the relevant point in the manual.

TROUBLE-SHOOTING

Problems	Possible causes	Remedies
The appliance does not work	The electric circuit is disrupted	- check whether the plug is properly inserted into the socket - check whether the power cable of the appliance is not damaged - check whether there is voltage in the socket, by plugging another appliance, e.g. a night lamp - check whether the appliance is switched on by setting the thermostat to a position above 0.
The lighting inside the chamber does not work	The bulb is loose or fused (only appliances with bulb lightning type)	- fit the bulb correctly or replace it (see section above “Replacing the interior light bulb)
Temperature inside the appliance is not low enough	Incorrect setting of the adjustment knob	- reset the knob to a higher position
	The ambient temperature is higher or lower than the climate range from table with technical specification	- the appliance is adapted to operation in the climate range from table with technical specification.
	The appliance is located in a sunlit place or near heat sources	- move the appliance to another place. Observe the guidelines contained in the manual
	Too much warm food loaded at a time	- wait 72 hours until the food becomes cool (freezes) and the required temperature is reached inside the chamber
	Internal air circulation obstructed	- place the food and containers in such a way that they do not touch the rear wall of the fridge
	The air circulation at the back of the appliance is obstructed	- move the appliance min. 30 mm away from the wall
	The door of the frid- ge/freezer is opened too often and/or remains open for too long	- reduce the frequency of opening the door and/or shorten the time when door remains open
	The door does not close completely	- place the food and containers so that they would not interfere with door closed
	The compressor is switched on too rarely	- check whether the ambient temperature is not lower than climate class
	Door gasket inserted incorrectly	- press the gasket in
The appliance works continuously	Incorrect setting of the adjustment knob	- reset the knob to a lower position
	See. ”Temperature inside the appliance is not low enough for description of other possible causes	See. ”Temperature inside the appliance is not low enough for description of other possible remedies
Water collects in the lower part of the appliance	The water discharge opening is clogged (depending on the model)	- clean the discharge opening (see the operating manual – chapter entitled ”Defrosting the fridge”)
	Internal air circulation obstructed	- place the food and containers in such a way as that they do not touch the rear wall of the fridge
The appliance generates unusual noise	Incorrect levelling of the appliance	- level the appliance properly
	The appliance is touching furniture and/ or other objects	- place the appliance at a location that ensures proper clearances around it

Certain sounds can be heard during normal use of the refrigerator, which do not affect its correct operation.

Sounds, which can be easily prevented:

●noise caused by the appliance which is not level - adjust the position with the adjustable turn-in front feet. Alternatively, place pads made of soft material under the rear rollers, especially when the appliance is placed on tiles.
●touching the adjacent piece of furniture - move the refrigerator away.
●creaking of the drawers or shelves - take out and put back the drawer or shelf.
●sounds of clinking bottles - move bottles apart.

Sounds heard during normal use are mainly due to operation of the thermostat, compressor (switching on) and cooling system (thermal expansion and contraction of the radiator caused by flow of the cooling agent).

ENVIRONMENTAL PROTECTION

Ozone layer protection

The refrigerants and foaming agents, which are 100% free of FCKW and FKW have been used for manufacturing our product. Therefore we help protecting the ozone layer and prevent the greenhouse effect increase. On the other hand, the innovative technology and environmentally friendly insulation help in reducing energy consumption.

Recycling of the packaging

Our packaging are made of environmentally friendly materials, which can be reused:

- The external packaging is made of cardboard/foil
- The FCKW free shape of foamed polystyrene (PS)
- Polyethylene (PE) foils and bags

Elimination / disposal of the equipment

If the appliance is no longer in use, cut the connecting conduit off the used equipment before its scrapping.

This appliance is marked with a symbol of the crossed out waste container in conformance with the European Directive **2002/96/EC**. Such marking informs that the equipment may not be kept together with other waste coming from the household after the period of its use. The user is obliged to dispose of the appliance at the waste collection point. The local waste collection points, shops and communal units form an appropriate system enabling the disposal of the equipment.

Handling the used electrical and electronic equipment properly contributes to the avoidance of consequences harmful to the human health and natural environment, resulting from the presence of hazardous substances and improper storage and processing of such equipment.

CLIMATE RANGE

The information about the climate range of the appliance is provided on the rated plate. It indicates at which ambient temperature (that is, room temperature, in which the appliance is working) the

Climate range	Permissible ambient temperature
SN	from +10°C to +32°C
N	from +16°C to +32°C
ST	from +16°C to +38°C
T	from +16°C to +43°C

Manufacturer's declaration

The manufacturer hereby declares that the appliance fulfils the requirements of the following European directives:

- The Low Voltage Directive **2006/95/EC**,
- The Electromagnetic Compatibility Directive **2004/108/EC**,

and therefore it has been marked with a CE and assigned a declaration of conformity, which is made available to the market supervising authorities.

1	Thermostat knob
2	Flap
3	Drawer
4	Ice cube tray

Items of equipment	FZ206.3	FZ136.3	FZ210.3
Flap	1	1	2
Drawer	4	2	4
Ice cube tray	1	1	1

SPECIFICATION

TYPE	FZ206.3	FZ136.3	FZ210.3
Manufacturer	AMICA WRONKI S.A.	AMICA WRONKI S.A.	AMICA WRONKI S.A.
Type of the appliance	freezer	freezer	freezer
Energy class[1]	A+	A+	A+
Annual power consumption kWh/year)[2]	190	172	219
Net usable volume (l)	140	80	168
Freezing chamber star classification[3]	*/***	*/***	*/***
Storage time (hrs), at no power supply	12	10	12
Freezing capacity (kg/24h)	10	10	10
Climate range[4]	SN	ST	ST
Noise level [dB(A) re1pW]	40	40	40
Supply voltage V/Hz	230V; 50 Hz	230V; 50 Hz	230V; 50 Hz
H x W x D	1252 x 545 x 566	845 x 545 x 566	1430 x 542 x 566
Appliance weight (kg)	46	40	47

1)A++/A+ (=low consumption) to G (=high consumption).

2)The energy consumption refers to the yearly consumption in kWh, indicated according to DIN EN 153. Deviations may occur in the practical operation of the appliance, depending on the use and place of its location.

3)*= storage room of approximately. -6°C
(**) = storage room of approximately. -12°C
(***) = freezing storage room of approximately -18°C
(*/***) = freezing storage room of approximately -18°C or below

4)Climate range means that your set temperature is maintained at ”normal” ambient temperature. Should the room temperture drop significantly below the defined scope, the appliance does not work so often and the undesirable temperature increase may occure dojść do niepożądanego wzrostu temperatury.

FZ136.3 - CHANGING THE DIRECTION OF THE DOOR OPENING

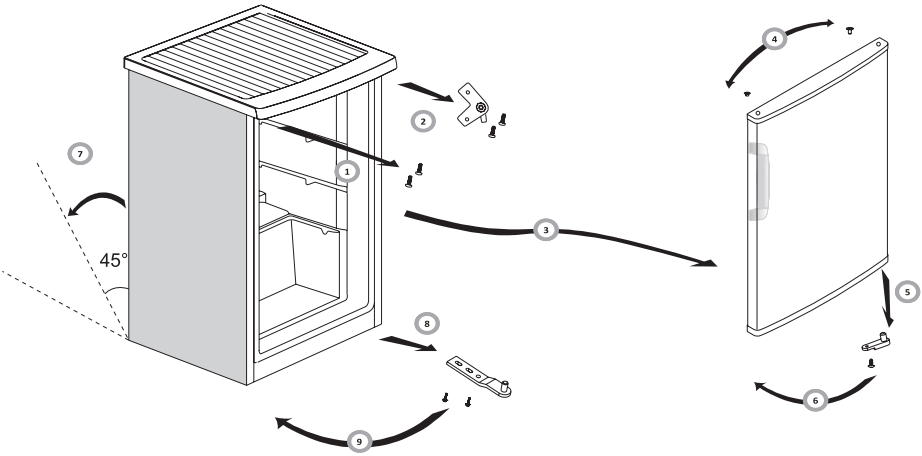

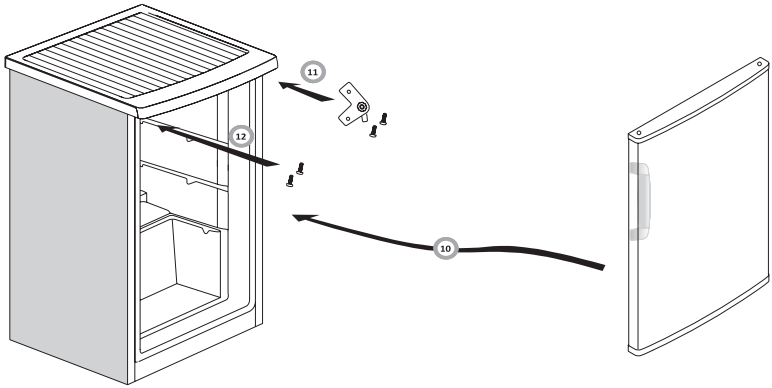

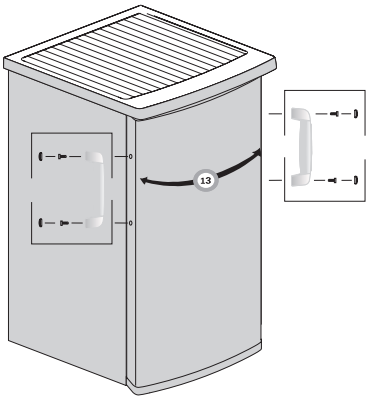

FZ206.3 - CHANGING THE DIRECTION OF THE DOOR OPENING

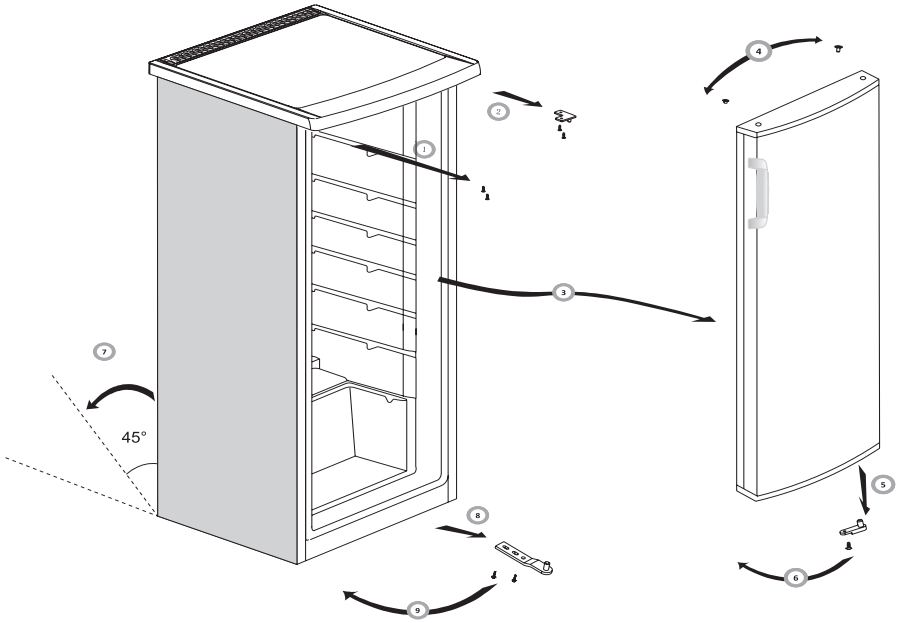

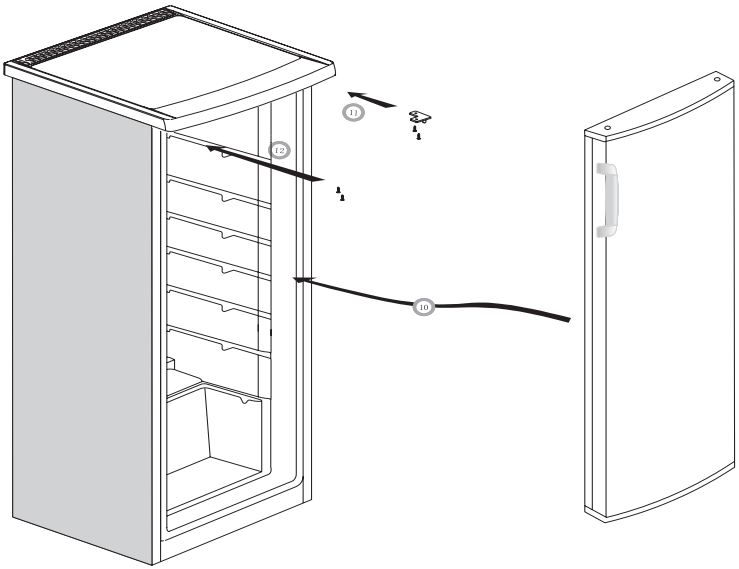

FZ206.3 - CHANGING THE DIRECTION OF THE DOOR OPENING

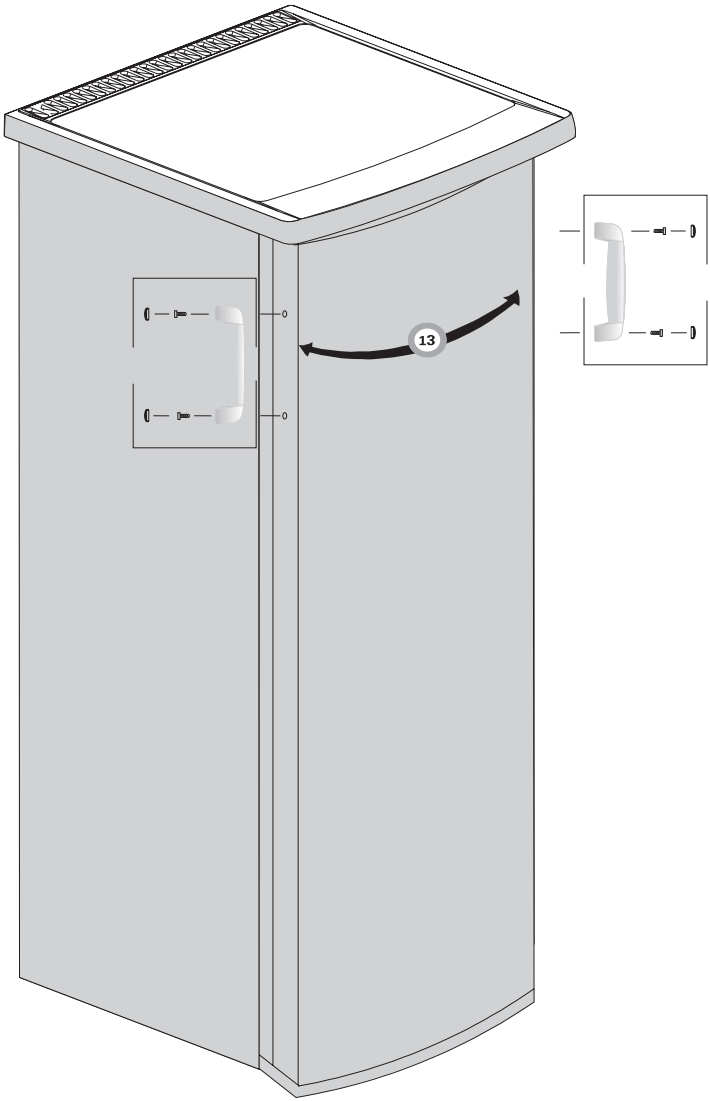

Amica

Service Help Line

For the UK: please call **0844 815 8880**
For Ireland: please call **0818 46 46 46**

IO 00625
(07.2011)